Crystal Oscillator and TVS Chip

10/2/2024

Sarthak Samal

1. Introduction

For our future golden Arduino board, it is important to familiarize ourselves with generating a stable clock signal using crystal oscillators and protecting the USB ports that will communicate with the board with TVS chip. In this lab, we will explore the behavior of crystal oscillators, how they work and why they are essential for generating clock signals. This lab will also explore the TVS chip and how they protect against cases of overvoltage. To do this, the following objectives will be employed:

Crystal Oscillator:

1. Introduce impedance to the feedback of a standard hex inverter clock
2. Explore the behavior of the impedance
3. Find the resonant frequency at which the impedance is lowest
4. Find ways to make the crystal oscillate at a specific frequency (rather than higher order frequencies) and to make it consistently oscillate

TVS Chip:

1. Run a large p-p sine wave into the TVS chip
2. Make note of the resulting waveform

2. Plan of Record

What does it mean to work?

Since this will not be a board we will be creating, the POR will highlight key things that should be taken away from the lab

1. The necessity of crystal oscillators must be demonstrated through thorough analysis of the component's impedance vs. frequency response
2. A stable clock signal should be generated using the crystal and hex inverter in practice
3. The TVS chip must be able to clip off any signal going into the chip such that the maximum voltage is the voltage in the reference pin (5V)

Features of the board:

Crystal oscillator:

1. 2-layer board consisting of a top signal plane and bottom return plane
2. 12 and 16 MHz crystal oscillators

TVS chip:

1. 2-layer board consisting of a top signal plane and bottom return plane
2. 4 I/O pins to protect overvoltage in 4 different signals
3. Reference pin to set the desired max voltage clip off

Basic Concept

The issue with just using a hex inverters is that the frequency of oscillation can be influenced by the input impedance of any component reading the signal. This can interfere with components that require precise frequencies such as the ATMega328 chip.

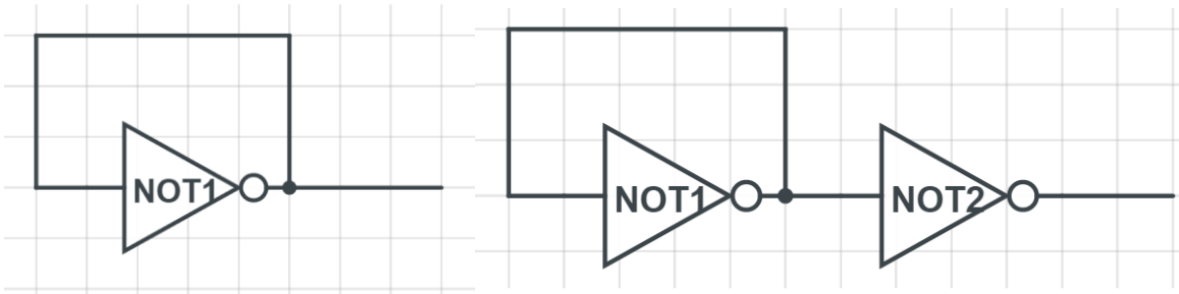

Fig 1: Standard Hex Inverter clock circuit (left) and a buffered circuit (right)

While the issue of input impedance can be solved with a buffered circuit, there is still difficulty in getting a specific frequency of oscillation.

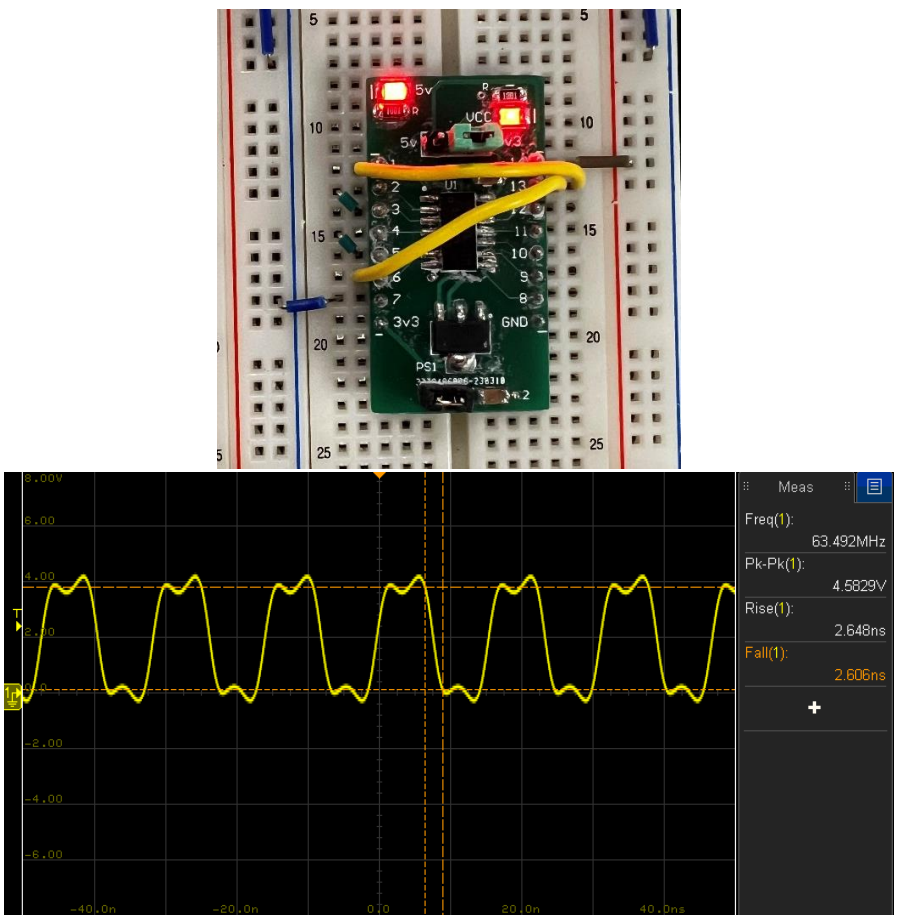

Fig 2: SBB single gate inverter (top) and resulting waveform (bottom)

Building the circuit from figure 1, we are able to generate a clock signal with a frequency of 63 MHz. Unfortunately, this frequency is too fast for many ICs to use. We can take advantage of propagation delay and introduce more NOT gates into the circuit.

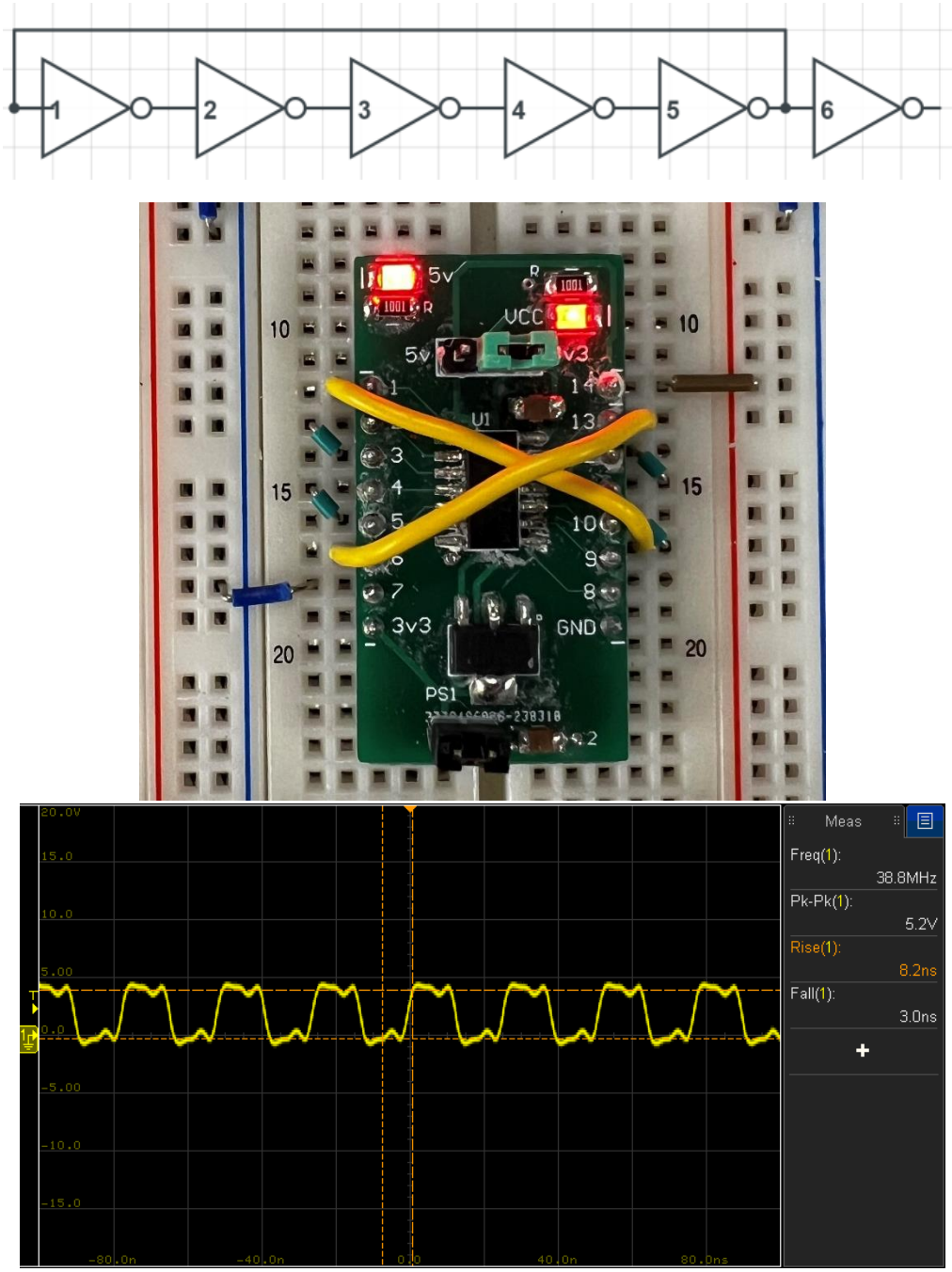

Fig 3: 5 Hex Inverter clock circuit (top) SBB (middle) and generated wave (bottom)

Take the 5 hex inverter clock signal (fig 2). This circuit can generate a 5.2V p-p 39.1 MHz signal. We would need to use more NOT gates to take advantage of propagation delay and achieve a slower oscillation. However, the standard SN74HC14DR hex inverter chip only has 6 inverters, therefore, additional chips must be used which may cut into production budget.

Additionally, we can introduce impedance to the feedback loop to change the frequency.

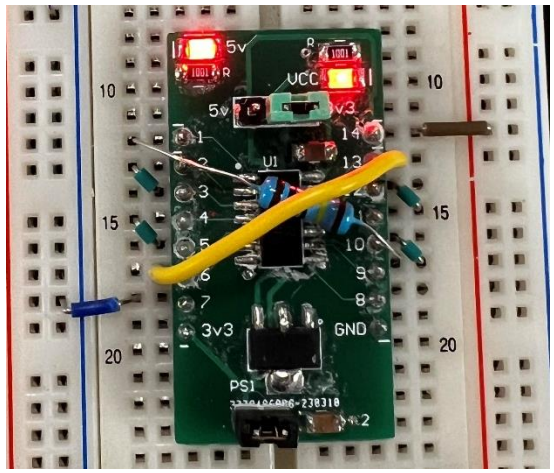

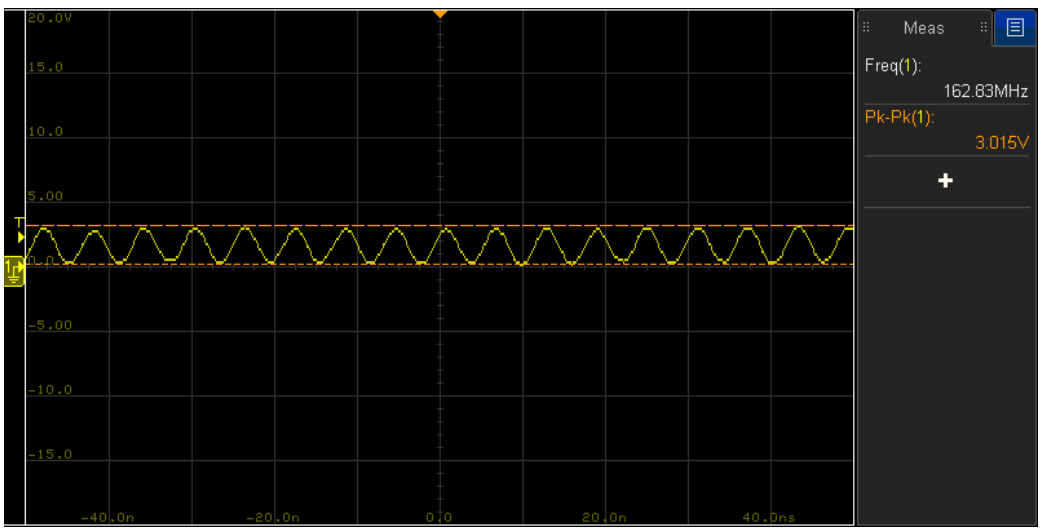

Fig 4: Clock signal from a 5 gate inverter circuit with 1 Mohm resistor in feedback

Introducing impedance in the feedback both increases the frequency of oscillation and reduces the p-p voltage. While this may be useful in changing the frequency, the reduction in volage may affect the readability of the signal.

Another way to set a lower frequency of oscillation is to use a component that has a frequency dependent impedance, such as a crystal oscillator.

These components have a very high impedance for any frequency signal apart from its resonant frequency, where its impedance is very low. Placing this component in the feedback loop of a hex inverter clock circuit (fig 3) will force the circuit to oscillate at the frequency of the crystal.

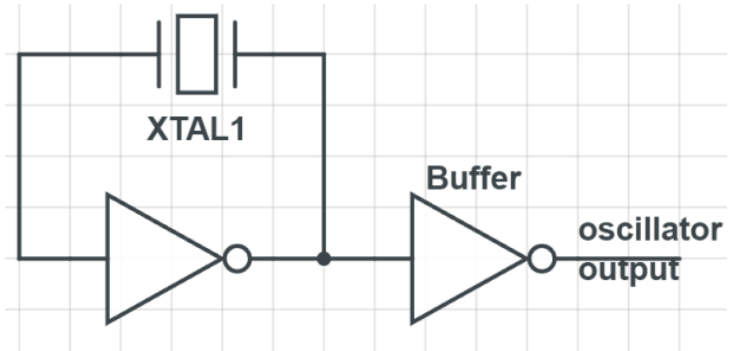

Fig 5. Hex inverter clock circuit with a 16 MHz crystal in the feedback loop

Characteristics of the 16 MHz Crystal Oscillator

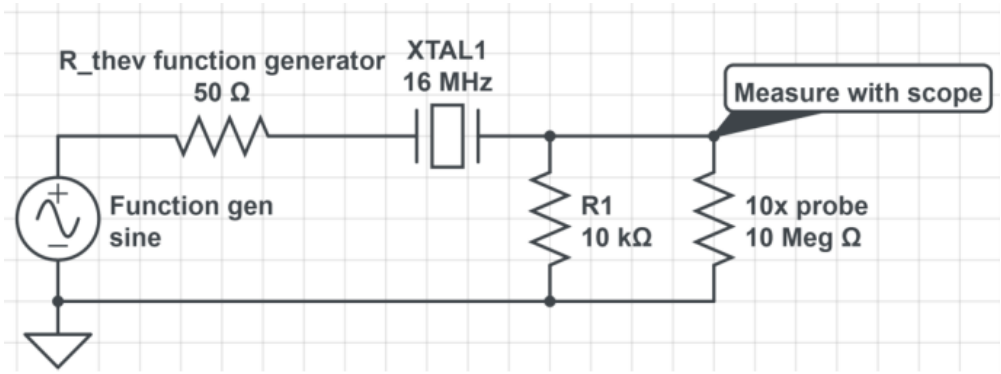

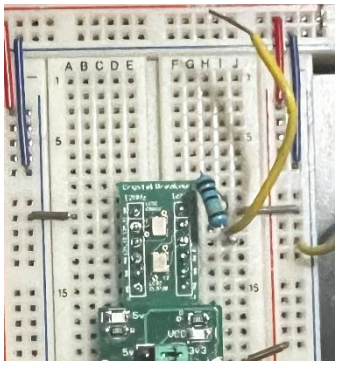

Fig 6. Setup to find the resonant frequency of the crystal (top) and SBB setup (bottom)

Note: The left side of the component is the 12 MHz crystal oscillator. The setup in figure 6 was mirrored to the left side to get measurements for the 12 MHz oscillator.

Using the setup in figure 4, we can run through a set of frequencies form 15.9 to 16.1 and find the point at which the voltage across the 10k ohm resistor is the highest, indicating a low impedance from the crystal.

To do this, an external waveform generator was set to generate a 8V p-p sine wave and sweep through frequencies 15.9 to 16.1 for 1 second.

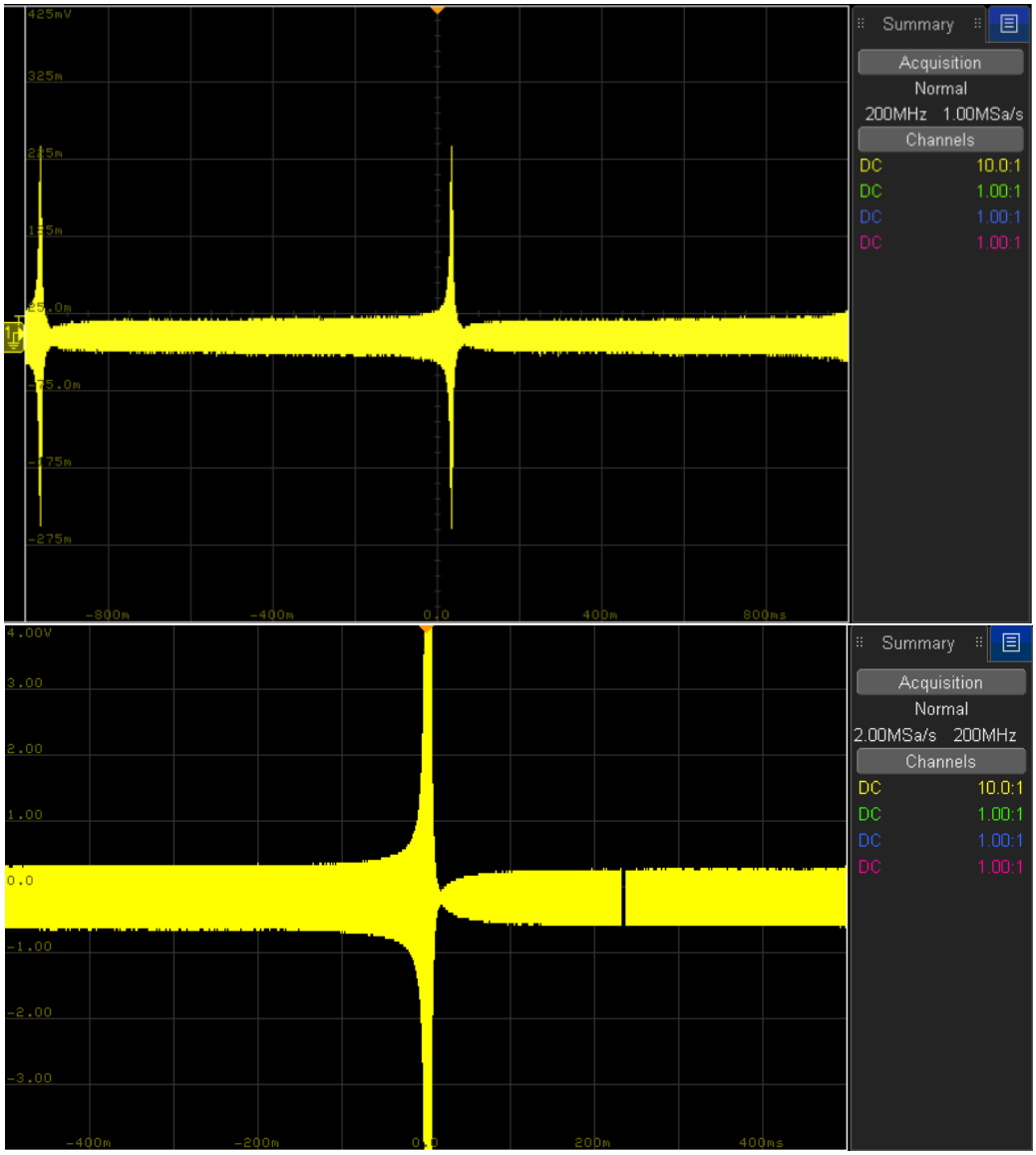

Fig 7. 16 Hz Crystal oscillator resonance (top) and 12 Hz resonance (bottom)

Note: There seems to be two points of resonance for the 16MHz crystal, however, this does not indicate the presence of multiple resonant frequencies between 15.9 and 16.1 MHz. Since the waveform generator is external to the scope, the scope cannot trigger to the waveform generator. The second peak is just the peak from the previous sweep.

After verifying the existence of a resonant frequency, we can find what this exact frequency is by performing a frequency response analysis and finding the point where the gain is highest. We can also verify the found frequency by sending a sine wave of that frequency into the oscillator and analyze the output.

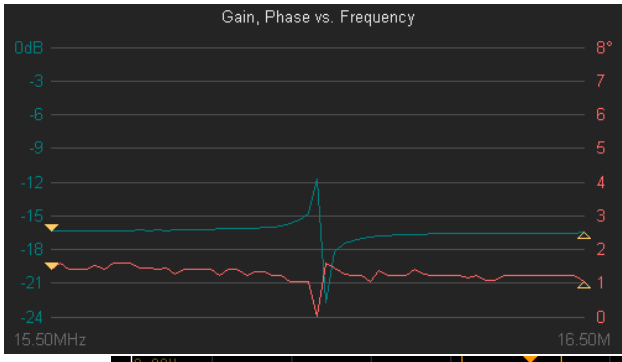

#	Frequency	Amplitude	Gain	Phase
26	15909082.5Hz	0.2010Vpp	-15.98dB	1.23°
27	15925668.5Hz	0.2010Vpp	-15.86dB	1.23°
28	15942271.8Hz	0.2010Vpp	-15.70dB	1.05°
29	15958892.4Hz	0.2010Vpp	-15.40dB	1.05°
30	15975530.3Hz	0.2010Vpp	-14.77dB	1.05°
31	15992185.6Hz	0.2010Vpp	-11.70dB	0.04°
32	16008858.2Hz	0.2010Vpp	-22.72dB	1.58°
33	16025548.2Hz	0.2010Vpp	-18.27dB	1.44°
34	16042255.7Hz	0.2010Vpp	-17.50dB	1.26°
35	16058980.5Hz	0.2010Vpp	-17.19dB	1.23°
36	16075722.8Hz	0.2010Vpp	-17.03dB	1.23°
37	16092482.5Hz	0.2010Vpp	-16.91dB	1.05°
38	16109259.7Hz	0.2010Vpp	-16.83dB	1.39°

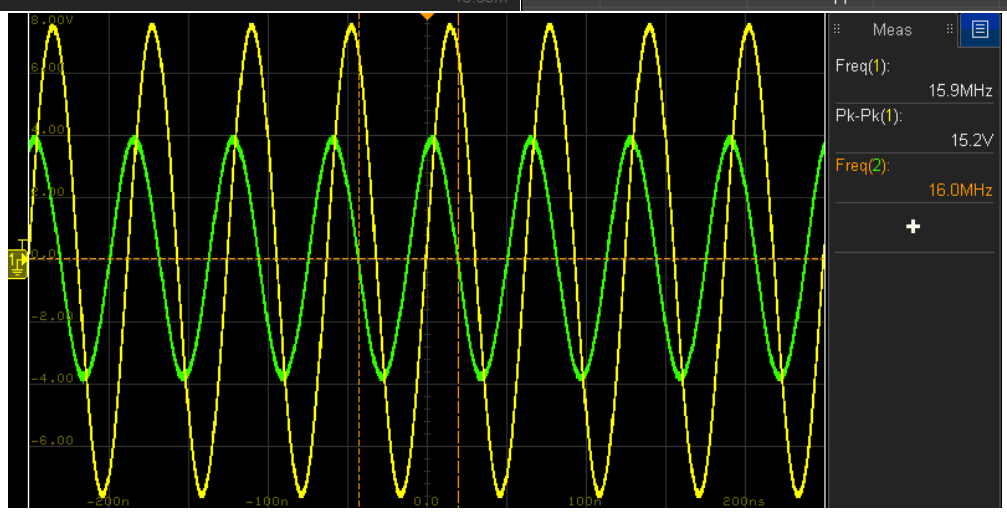

Fig 8. Frequency response (top) and Resonant frequency of 16MHz crystal oscillator (bottom)

Note: The frequency response plot displays the phase response as well (pink). This has no significance to the function of the crystal and will be ignored.

According to figure 8, we see that the resonance is at around 15.992 MHz (peak gain of -11.7 dB at 15.992 MHz). Sending a sine wave with that frequency into the crystal (green) output, we get an output voltage (yellow) of a higher amplitude, thus verifying this resonant frequency.

Note: There seems to be positive gain at the resonant frequency despite the peak at -11dB. The crystal is a complex component, thus, the plot cannot capture its full characteristics. The plot serves to merely indicate the existence of resonance.

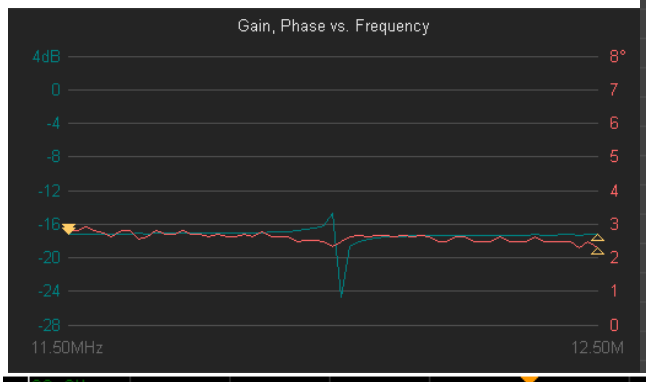

#	Frequency	Amplitude	Gain	Phase
25	11890023.4Hz	0.2010Vpp	-16.91dB	2.64°
26	11906558.4Hz	0.2010Vpp	-16.88dB	2.64°
27	11923116.3Hz	0.2010Vpp	-16.81dB	2.46°
28	11939697.3Hz	0.2010Vpp	-16.69dB	2.50°
29	11956301.4Hz	0.2010Vpp	-16.48dB	2.50°
30	11972928.5Hz	0.2010Vpp	-16.13dB	2.46°
31	11989578.8Hz	0.2010Vpp	-14.68dB	2.32°
32	12006252.2Hz	0.2010Vpp	-24.65dB	2.46°
33	12022948.8Hz	0.2010Vpp	-18.67dB	2.64°
34	12039668.7Hz	0.2010Vpp	-18.04dB	2.66°
35	12056411.7Hz	0.2010Vpp	-17.77dB	2.64°
36	12073178.1Hz	0.2010Vpp	-17.66dB	2.66°
37	12089967.8Hz	0.2010Vpp	-17.54dB	2.65°

Fig 9. Frequency response (top) and Resonant frequency of 16MHz crystal oscillator (bottom)

Note: The output wave on the bottom portion is shown in green rather than yellow.

Following a similar process, we see a resonant frequency of 11.989 MHz for the 12 MHz oscillator according to figure 9. Inputting that frequency gives us a positive gain output, thus verifying our findings.

Something important to note is the existence of higher order resonant frequencies (figure 7).

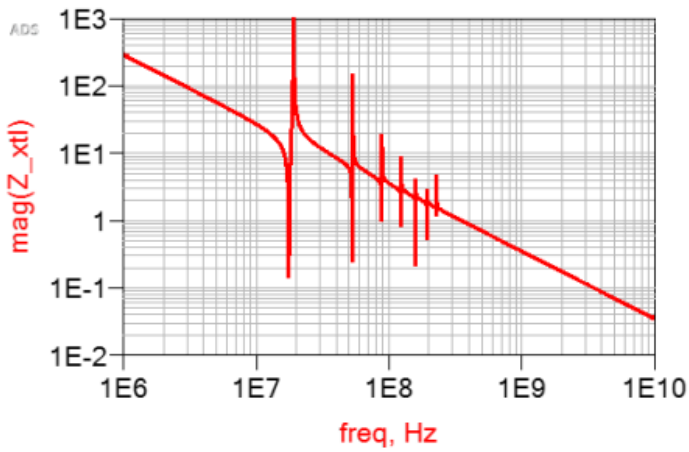

Fig 9. Impedance profile of a typical crystal oscillator

Because of this, it is possible that the crystal may operate at a different frequency than 16 MHz. Methods to avoid this will be explored in the next section.

Practical Usage of the Crystal Oscillator

Implementing the circuit shown in figure 5 on a SBB we can see that the frequency of the hex inverter circuit clock changes from 63 MHz to 16 MHz like we expected (figure 10).

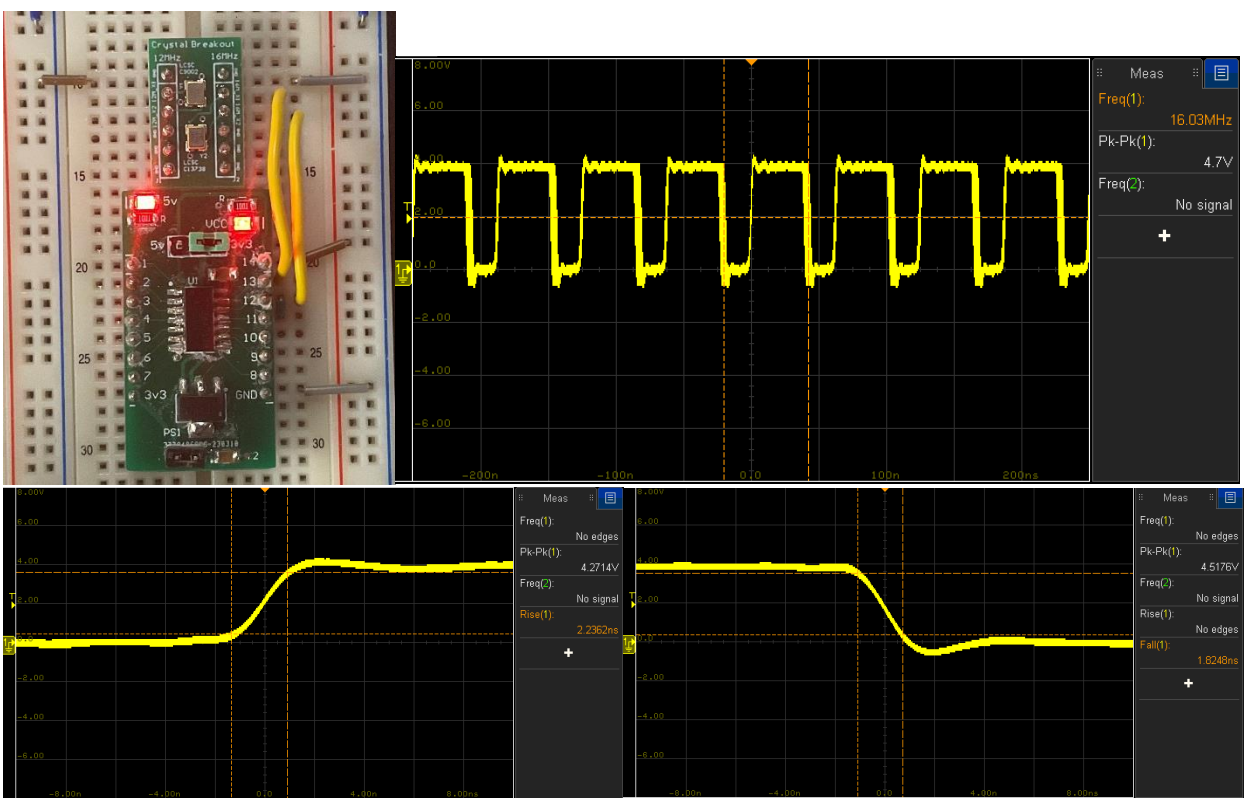

Fig 10: SBB of XTAL clock circuit (top left) full waveform (top right), rise (bottom left) and fall (bottom right)

The downsides of this circuit is that sometimes the circuit will not generate a signal unless something “kickstarts” the circuit into action, the readings in figure 10 were a lucky scenario. To solve this problem, a 1 MOhm resistor can be connected to the crystal in parallel. This way, the large impedance causes a small delay in the signal which can kickstart the clock.

Another problem is the existence of higher order resonant frequencies as discussed with figure 9. To ensure that the crystal only oscillates at 16 MHz, we can introduce very small capacitors (22 pF) connected to either end of the crystal to filter out higher frequencies (i.e. a low pass filter).

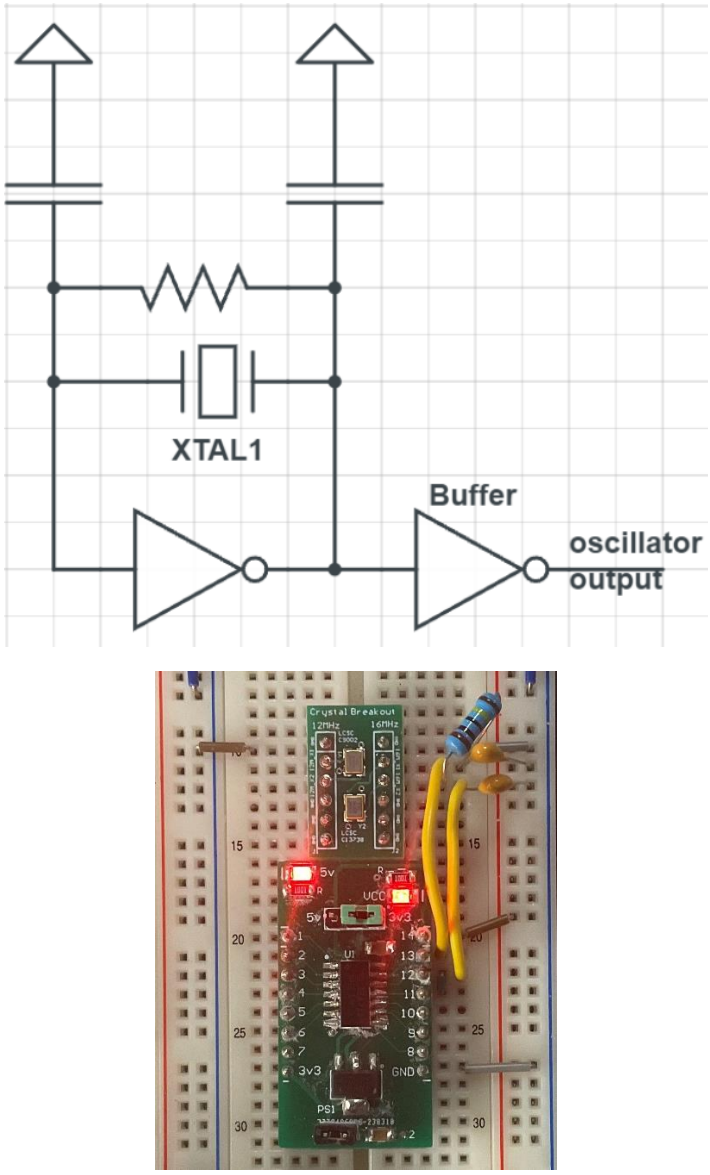

Fig 11: Complete XTAL clock circuit schematic (top) and SBB (bottom)

Note: The waveform is the same as the one shown in figure 10

With the circuit in figure 11, we have created a consitent clock circuit that will only oscillate at 16 MHz.

TVS Chip Wave Rectification

The TVS chip is essentlaly an array of diodes arranged in a way that only allows a certain voltage range to be read at the I/O pin. In this case, since we are supplying a reference voltage of 5 volts, we should expect 0-5V to be read at the pin, with the rest of the voltages being clipped.

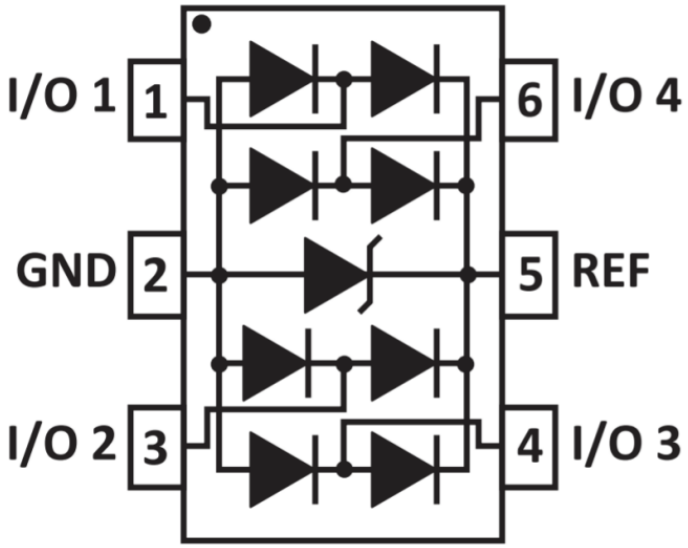

Fig 12: Inner circuitry of the TVS chip

The diodes force the current to flow from left to right. The current is directed to a Zener diode operating at a breakdown voltage of 5V. Once current flows from REF to GND, it is fed back into the I/O pins. Due to this feedback, the input signal will be clipped due to the temporary short to GND.

To test this, a input sinusoidal wave with 20V p-p was sent into I/O 1.

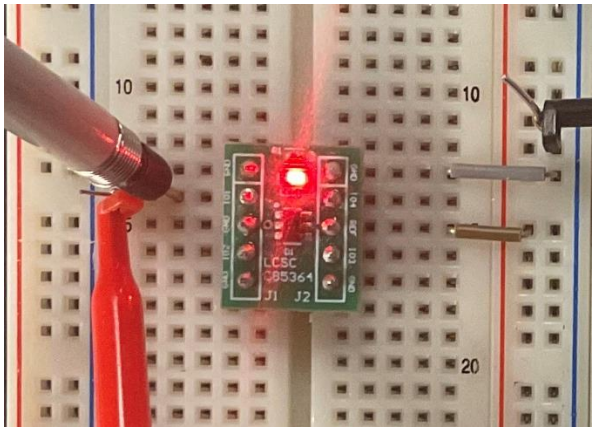

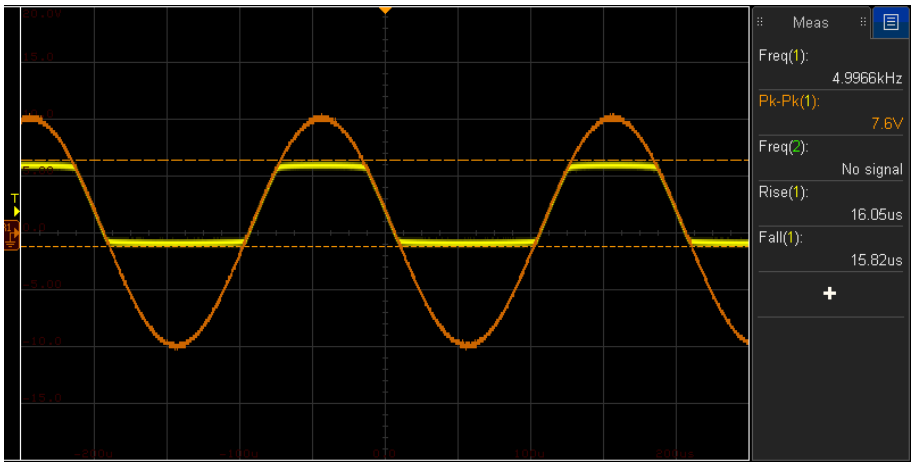

Fig 13: SSB Setup (top) and Signal clipping due to TVS chip

From figure 13, we see the input wave (orange) being clipped at +5.7V and -.7V (yellow). Note that the signal is not getting clipped at exactly +5V and 0V. This is due to the voltage drop due to each of the diodes; when current flows through these diodes, there is a drop of .7V. Since the signal goes through both the Zener diode and the diode on the I/O pin, we see a .7V bias on the top and bottom of the waveform.

Conclusion

Some of the most important components to the golden Arduino board is the crystal oscillator and overvoltage protection measures. Because the Arduino requires a precise signal to function properly, a crystal oscillator is used to keep a stable 16 MHz clock signal rather than using propagation delay, which would mean using multiple hex inverter chips.

The TVS chip also shows how an array of diodes can be used to control the flow of current in such a way that voltages higher than 5V create a temporary short to GND, effectively cutting off voltages above 5V. The key takeaways from the lab are as follows:

1. Crystal oscillators offer the most efficient way to produce a clock signal at a specific frequency. This useful for delicate components that require a very specific frequency

2. Precautionary measures should be taken with crystal oscillators. High impedances in parallel can make the crystal oscillate more consistently and small capacitors can filter out higher orders of frequencies.

3. TVS diodes should be used anytime there is communication between a board and a computer to ensure that the ports do not get damaged due to overvoltage.